Floyd Bell Inc
SOUND SOLUTIONS

AudioLarm II Series
CH-V09-525-Q(M)



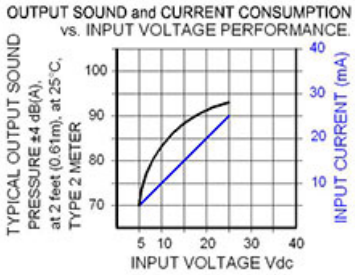


More Information

UL Recognized

RoHS Rohs Compliant

## Specifications

| | |
|---|---|
| **Mounting** | Panel Mount with Volume Control |
| **Operating Mode** | Medium Loud Moderate Chime Tone |
| **Operating Voltage** | 5-25 Vdc |
| **Operating Frequency** | 2900±250 Hz |
| **Typical Operating Current** | 5 mA at 5 Vdc<br>25 mA at 25 Vdc |
| **Typical Sound Pressure** | 70 ±5 dB(A) at 5 Vdc at 24 inches (61 cm), at 25°C<br>93 ±5 dB(A) at 25 Vdc at 24 inches (61 cm), at 25°C |
| **Termination** | Quick Connect Blades |
| **Termination Strength** | Pull test with a maximum of 22 pounds (10 kg) load |
| **Operating Temperature** | -20_C to +65_C |
| **Storage Temperature** | -40_C to +85_C |
| **Surge Voltage** | 20% over maximum rated voltage for less than 5 minutes |
| **Reverse Voltage Protection** | To the maximum operating voltage |
| **Construction Materials** | Case- Plastic _NORYL_ N-190, Flame Retardant UL 94-VO, Black<br>Internal Circuit- Audio-oscillator and piezoelectric driver<br>Potting- 2 parts epoxy resin or silicone, black<br>Diaphragm- Stainless Steel 304 |
| **Gasket** | NEMA 4X Gasket (sold separately) 0.062" thick, 60 Durometer Neoprene |
| **Construction Materials** | ASTM B117 Certified - Withstands exposure to salt spray for 300 hours<br>IP 68 Certified - Withstands water submergence and dust exposure<br>Humidity- 95% relative humidity at +40_C continuously for 100 hours.<br>Vibration- Withstands vibration between 0 and 55 Hz. on all axes. |
| **Life Expectancy** | 10 years under normal operating conditions. |
| **Warranty** | For a period of two years from the date of manufacture under normal operating conditions. |
| **Notes** | This product is not intended as a life safety device. |
| **Terms and Conditions of Sale** | Link here |

**Dimensions**

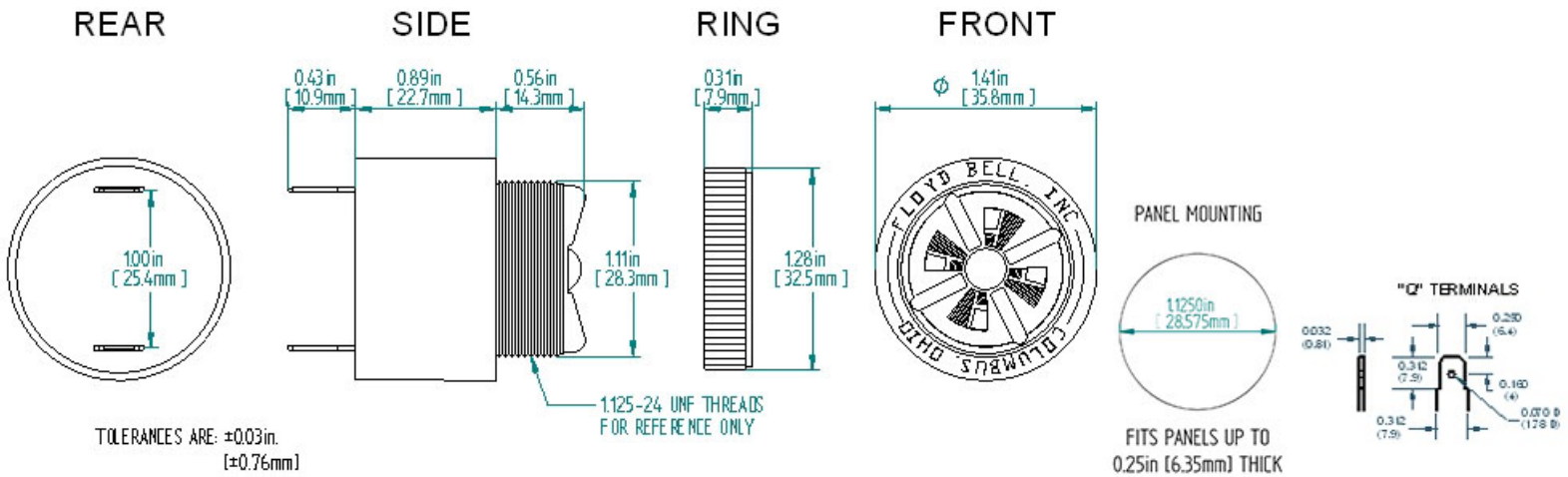
REAR
SIDE
RING
FRONT
1.00 in
[ 25.4mm ]
0.43 in
[ 10.9mm ]
0.89 in
[ 22.7mm ]
0.56 in
[ 14.3mm ]
1.11 in
[ 28.3mm ]
1.125-24 UNF THREADS
FOR REFERENCE ONLY
0.31 in
[ 7.9mm ]
1.28 in
[ 32.5mm ]
Φ 1.41 in
[ 35.8mm ]
FLOYD BELL INC
COLUMBUS OHIO
TOLERANCES ARE: ±0.03 in.
[±0.76mm]
PANEL MOUNTING
1.1250 in
[ 28.575mm ]
FITS PANELS UP TO
0.25 in [6.35mm] THICK
"Q" TERMINALS
0.032
(0.81)
0.250
(6.4)
0.312
(7.9)
0.160
(4)
0.312
(7.9)
0.070 Ø
(1.78 Ø)