AudioLarm II Series
LB-V07-530-Q(S)



More Information

Rohs Compliant

Dimensions

Specifications

Mounting	Panel Mount with Volume Control
Operating Mode	Low Output Slow Beep Tone
Operating Voltage	5-30 Vdc
Operating Frequency	2900±250 Hz
Typical Operating Current	2 mA at 5 Vdc 20 mA at 30 Vdc
Typical Sound Pressure	80 ±5 dB(A) at 5 Vdc at 24 inches (61 cm), at 25°C 85 ±5 dB(A) at 30 Vdc at 24 inches (61 cm), at 25°C
Termination	Quick Connect Blades
Termination Strength	Pull test with a maximum of 22 pounds (10 kg) load
Operating Temperature	-20_C to +65_C
Storage Temperature	-40_C to +85_C
Surge Voltage	20% over maximum rated voltage for less than 5 minutes
Reverse Voltage Protection	To the maximum operating voltage
Construction Materials	Case- Plastic _NORYL_ N-190, Flame Retardant UL 94-VO, Black Internal Circuit- Audio-oscillator and piezoelectric driver Potting- 2 parts epoxy resin or silicone, black Diaphragm- Stainless Steel 331
Gasket	NEMA 4X Gasket (sold separately) 0.062" thick, 60 Durometer Neoprene
Construction Materials	ASTM B117 Certified - Withstands exposure to salt spray for 300 hours IP 68 Certified - Withstands water submergence and dust exposure Humidity- 95% relative humidity at +40_C continuously for 100 hours. Vibration- Withstands vibration between 0 and 55 Hz. on all axes.
Life Expectancy	10 years under normal operating conditions.
Warranty	For a period of two years from the date of manufacture under normal operating conditions.
Notes	This product is not intended as a life safety device.
Terms and Conditions of Sale	Link here

REAR

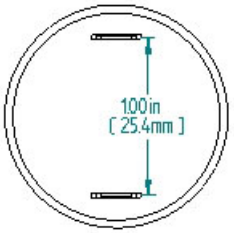

SIDE

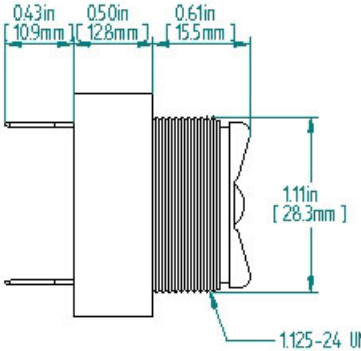

RING

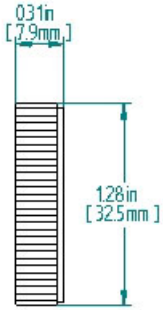

FRONT

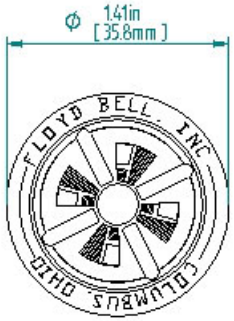

TOLERANCES ARE: ±0.03in.
[±0.76mm]

PANEL MOUNTING



FITS PANELS UP TO
0.25in [6.35mm] THICK

"Q" TERMINALS

