Floyd Bell Inc
SOUND SOLUTIONS

CAN Alarm Series
AN454H_CAN





Dimensions

More Information

RoHS Rohs Compliant

Specifications

Mounting	Bracket Mount
Operating Mode	Voice Message: Up to 255 Recorded Messages
Operating Voltage	10-29 Vdc
Operating Frequency	300Hz to 10Khz
Typical Operating Current	0 mA at 10 Vdc 250 mA at 29 Vdc
Typical Sound Pressure	0 ±5 dB(A) at 10 Vdc at 24 inches (61 cm), at 25°C 115 ±5 dB(A) at 29 Vdc at 24 inches (61 cm), at 25°C
Termination	Deutsch DT04-4P (gold terminals)
Operating Temperature	-20_C to +65_C
Storage Temperature	-40_C to +85_C
Surge Voltage	20% over maximum rated voltage for less than 5 minutes

Reverse Voltage Protection	To the maximum operating voltage
Construction Materials	AN454 is designed for wet and damp environments
Life Expectancy	10 years under normal operating conditions.
Warranty	For a period of one year from the date of manufacture under normal operating conditions.
Notes	This product is not intended as a life safety device.
Terms and Conditions of Sale	Link here

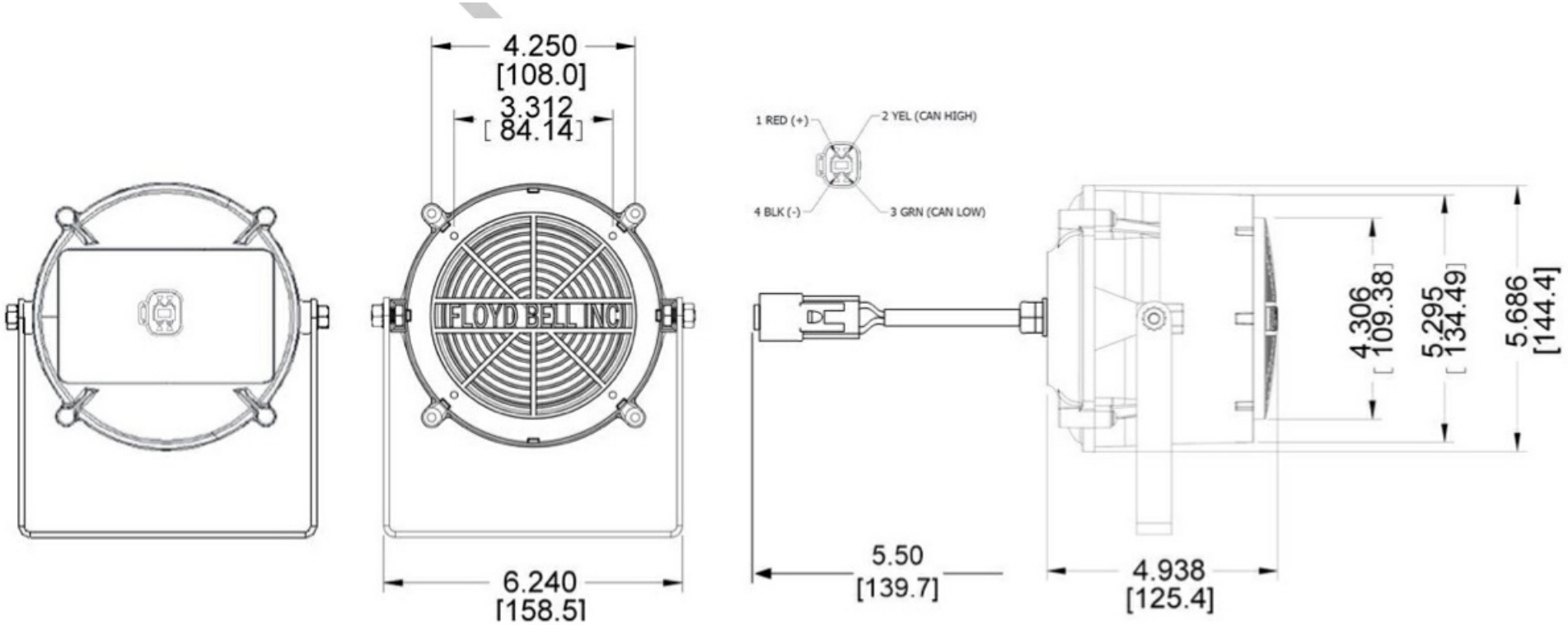

BACK

SIDE

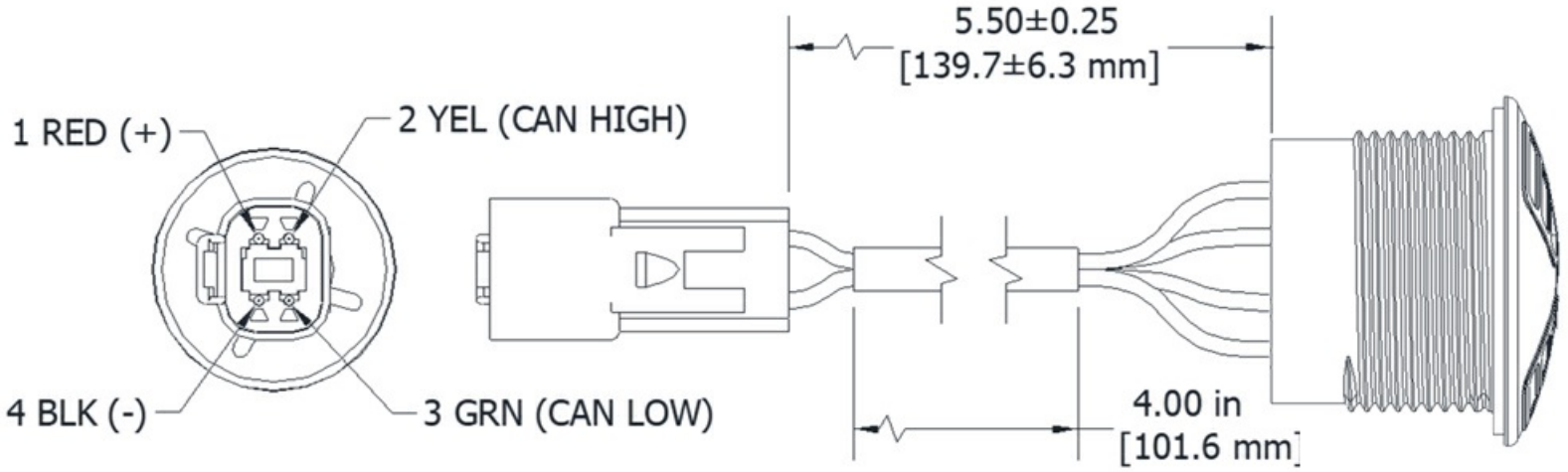

TOLERANCES ARE ± 0.03 ± 0.76mm UNLESS OTHERWISE NOTED