Floyd Bell Inc
SOUND SOLUTIONS

Turbo Series
TXCBW-86-530-Q (S)



More Information

UL Recognized

Rohs Compliant

## Specifications

| | |
|---|---|
| **Mounting** | Panel Mount |
| **Operating Mode** | Extra Loud Slow Multiple Tone |
| **Operating Voltage** | 5-30 Vdc |
| **Operating Frequency** | 2900±250 Hz |
| **Typical Operating Current** | 5 mA at 5 Vdc<br>25 mA at 30 Vdc |
| **Typical Sound Pressure** | 92 ±5 dB(A) at 5 Vdc at 24 inches (61 cm), at 25°C<br>103 ±5 dB(A) at 30 Vdc at 24 inches (61 cm), at 25°C |
| **Termination** | Quick Connect Blades |
| **Termination Strength** | Pull test with a maximum of 22 pounds (10 kg) load |
| **Operating Temperature** | -20_C to +65_C |
| **Storage Temperature** | -40_C to +85_C |
| **Surge Voltage** | 20% over maximum rated voltage for less than 5 minutes |
| **Reverse Voltage Protection** | To the maximum operating voltage |
| **Construction Materials** | Case- Plastic _NORYL_ N-190, Flame Retardant UL 94-VO, Black<br>Internal Circuit- Audio-oscillator and piezoelectric driver<br>Potting- 2 parts epoxy resin or silicone, black<br>Diaphragm- Stainless Steel 306 |
| **Gasket** | NEMA 4X Gasket (Included) 0.125" thick, 60 Durometer Neoprene |
| **Construction Materials** | ASTM B117 Certified - Withstands exposure to salt spray for 300 hours<br>IP 68 Certified - Withstands water submergence and dust exposure<br>Humidity- 95% relative humidity at +40_C continuously for 100 hours.<br>Vibration- Withstands vibration between 0 and 55 Hz. on all axes. |
| **Life Expectancy** | 10 years under normal operating conditions. |
| **Warranty** | For a period of two years from the date of manufacture under normal operating conditions. |
| **Notes** | This product is not intended as a life safety device. |
| **Terms and Conditions of Sale** | Link here |

**Dimensions**

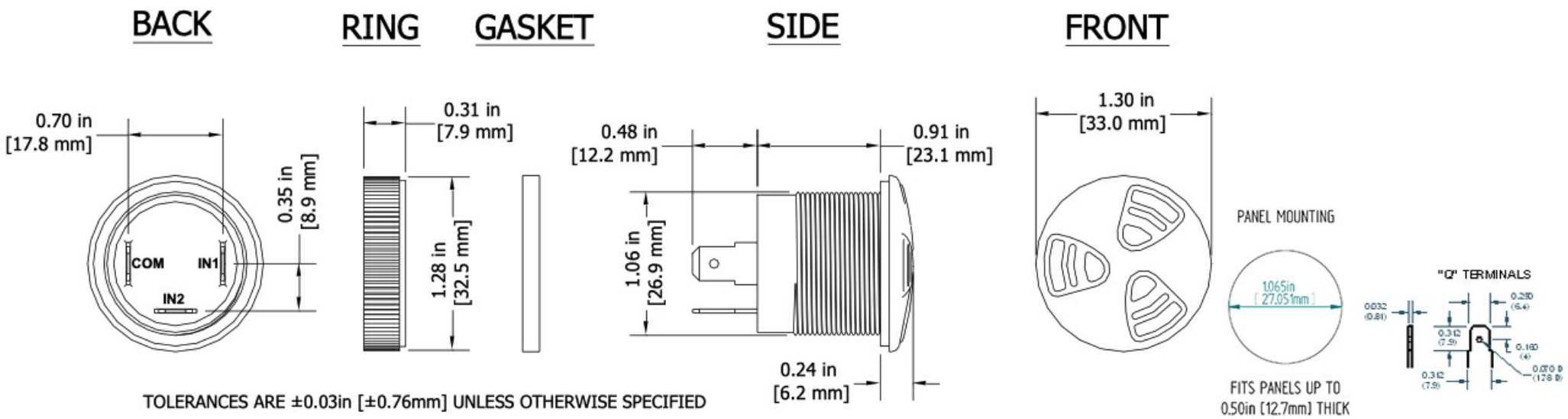
BACK
RING
GASKET
SIDE
FRONT
0.70 in
[17.8 mm]
0.35 in
[8.9 mm]
COM
IN1
IN2
0.31 in
[7.9 mm]
1.28 in
[32.5 mm]
0.48 in
[12.2 mm]
0.91 in
[23.1 mm]
1.06 in
[26.9 mm]
0.24 in
[6.2 mm]
1.30 in
[33.0 mm]
PANEL MOUNTING
1.065in
[27.051mm]
FITS PANELS UP TO
0.50in [12.7mm] THICK
"Q" TERMINALS
TOLERANCES ARE ±0.03in [±0.76mm] UNLESS OTHERWISE SPECIFIED