Floyd Bell Inc
SOUND SOLUTIONS

Turbo Light Series
TLL-87R-12V-Q



More Information

UL Recognized

Rohs Compliant

Specifications

Mounting	Panel Mount
Color	Low Brightness Red
Operating Mode	
Operating Voltage	12-12 Vdc
Typical Operating Current	80 mA at 12 Vdc
Typical Brightness	1000 cd/m^2, at 12 Vdc at 25°C
Termination	Quick Connect Blades
Termination Strength	Pull test with a maximum of 22 pounds (10 kg) load
Operating Temperature	-20_C to +65_C
Storage Temperature	-40_C to +100_C
Surge Voltage	20% over maximum rated voltage for less than 5 minutes
Reverse Voltage Protection	To the maximum operating voltage
Construction Materials	Lens/Case- Red Translucent Polycarbonate 94 VO Potting- 2 parts epoxy resin or silicone, black
Gasket	NEMA 4X Gasket (Included) 0.125" thick, 60 Durometer Neoprene
Construction Materials	ASTM B117 Certified - Withstands exposure to salt spray for 300 hours IP 68 Certified - Withstands water submergence and dust exposure Humidity- 95% relative humidity at +40_C continuously for 100 hours. Vibration- Withstands vibration between 0 and 55 Hz. on all axes.
Life Expectancy	10 years under normal operating conditions.
Warranty	For a period of two years from the date of manufacture under normal operating conditions.
Notes	This product is not intended as a life safety device.
Terms and Conditions of Sale	Link here

Dimensions

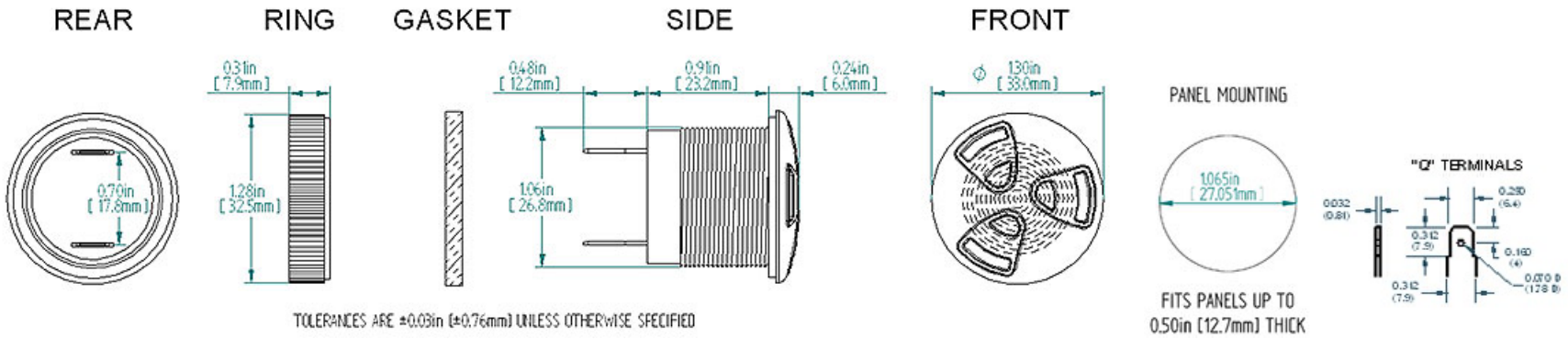
REAR
RING
GASKET
SIDE
FRONT
0.31in [7.9mm]
0.70in [17.8mm]
1.28in [32.5mm]
0.48in [12.2mm]
0.91in [23.2mm]
0.24in [6.0mm]
1.06in [26.8mm]
Ø 1.30in [33.0mm]
PANEL MOUNTING
1.065in [27.051mm]
FITS PANELS UP TO 0.50in [12.7mm] THICK
"Q" TERMINALS
0.032 (0.81)
0.250 (6.4)
0.312 (7.9)
0.160 (4)
0.070 Ø (1.78 Ø)
0.312 (7.9)
TOLERANCES ARE ±0.03in (±0.76mm) UNLESS OTHERWISE SPECIFIED