Floyd Bell Inc
SOUND SOLUTIONS

Turbo Light Series
TLTH-87RYG-930-Q



More Information

UL Recognized

Rohs Compliant

Specifications

Mounting	Panel Mount
Color	Multiple Color
Operating Mode	
Operating Voltage	9-30 Vdc
Typical Operating Current	145 mA at 9 Vdc 50 mA at 30 Vdc
Typical Brightness	2000 cd/m^2, at 9 Vdc at 25°C 9000 cd/m^2, at 30 Vdc at 25°C
Termination	Quick Connect Blades
Termination Strength	Pull test with a maximum of 22 pounds (10 kg) load
Operating Temperature	-40_C to +85_C
Storage Temperature	-40_C to +100_C
Surge Voltage	20% over maximum rated voltage for less than 5 minutes
Reverse Voltage Protection	To the maximum operating voltage
Construction Materials	Lens/Case- White Translucent Polycarbonate 94 VO Potting- 2 parts epoxy resin or silicone, black
Gasket	NEMA 4X Gasket (Included) 0.125" thick, 60 Durometer Neoprene
Construction Materials	ASTM B117 Certified - Withstands exposure to salt spray for 300 hours IP 68 Certified - Withstands water submergence and dust exposure Humidity- 95% relative humidity at +40_C continuously for 100 hours. Vibration- Withstands vibration between 0 and 55 Hz. on all axes.
Life Expectancy	17 years under normal operating conditions.
Warranty	For a period of two years from the date of manufacture under normal operating conditions.
Notes	This product is not intended as a life safety device.
Terms and Conditions of Sale	Link here

Dimensions

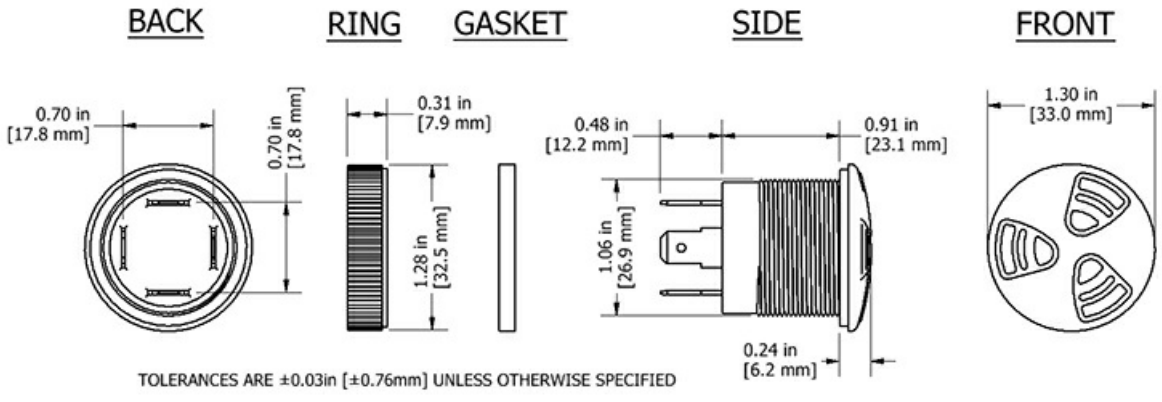
BACK
RING
GASKET
SIDE
FRONT
0.70 in [17.8 mm]
0.70 in [17.8 mm]
0.31 in [7.9 mm]
1.28 in [32.5 mm]
0.48 in [12.2 mm]
0.91 in [23.1 mm]
1.06 in [26.9 mm]
0.24 in [6.2 mm]
1.30 in [33.0 mm]
TOLERANCES ARE ±0.03in [±0.76mm] UNLESS OTHERWISE SPECIFIED

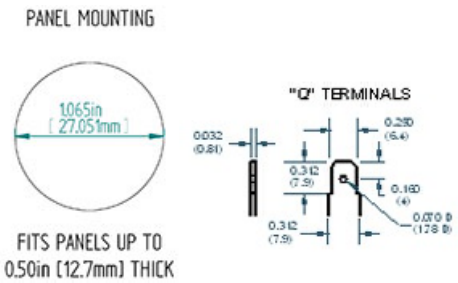
PANEL MOUNTING
1.065in [27.051mm]
FITS PANELS UP TO
0.50in [12.7mm] THICK
"Q" TERMINALS
0.032 (0.81)
0.250 (6.4)
0.312 (7.9)
0.160 (4)
0.070 Ø (1.78 Ø)
0.312 (7.9)