Floyd Bell Inc
SOUND SOLUTIONS

Twin Turbo Series
TLHW-V88G-930-SS



More Information

RoHS Rohs Compliant

## Specifications

| | |
|---|---|
| **Mounting** | Panel Mount with Volume Control |
| **Color** | Green |
| **Operating Mode** | Slow Warble Tone |
| **Operating Voltage** | 9-30 Vdc |
| **Operating Frequency** | 3000±250 Hz |
| **Typical Operating Current** | 110 mA at 9 Vdc<br>50 mA at 30 Vdc |
| **Typical Sound Pressure** | 85 ±5 dB(A) at 9 Vdc at 24 inches (61 cm), at 25°C<br>103 ±5 dB(A) at 30 Vdc at 24 inches (61 cm), at 25°C |
| **Termination** | Quick Connect Blades with Screws |
| **Termination Strength** | Pull test with a maximum of 22 pounds (10 kg) load |
| **Operating Temperature** | -20_C to +65_C |
| **Storage Temperature** | -40_C to +85_C |
| **Surge Voltage** | 20% over maximum rated voltage for less than 5 minutes |
| **Reverse Voltage Protection** | To the maximum operating voltage |
| **Construction Materials** | Lens/Case- Green Translucent Polycarbonate 94 VO<br>Potting- 2 parts epoxy resin or silicone, black |
| **Gasket** | NEMA 4X Gasket (Included) 0.125" thick, 60 Durometer Neoprene |
| **Construction Materials** | ASTM B117 Certified - Withstands exposure to salt spray for 300 hours<br>IP 68 Certified - Withstands water submergence and dust exposure<br>Humidity- 95% relative humidity at +40_C continuously for 100 hours.<br>Vibration- Withstands vibration between 0 and 55 Hz. on all axes. |
| **Life Expectancy** | 10 years under normal operating conditions. |
| **Warranty** | For a period of two years from the date of manufacture under normal operating conditions. |
| **Notes** | This product is not intended as a life safety device. |
| **Terms and Conditions of Sale** | Link here |

**Dimensions**

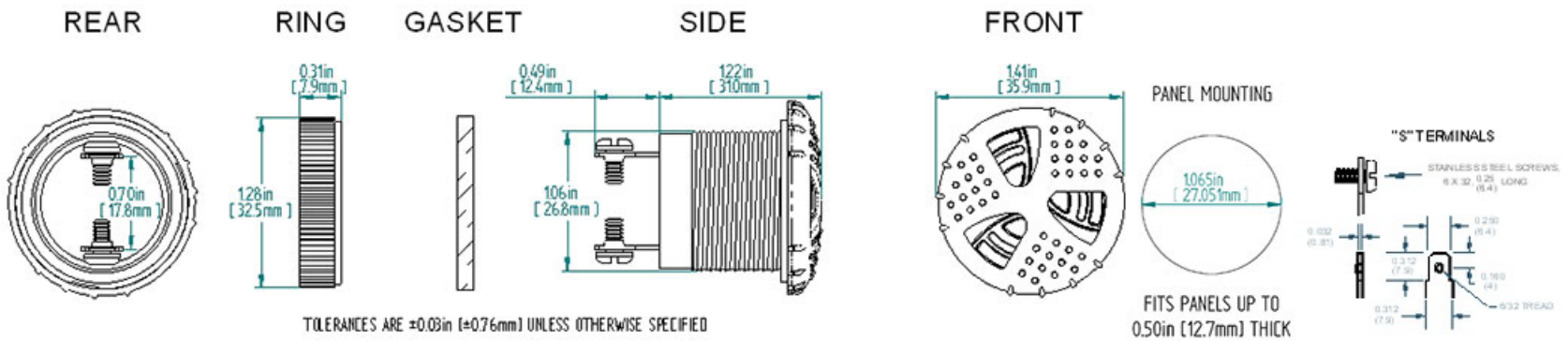
REAR
RING
GASKET
SIDE
FRONT
0.70in [17.8mm]
0.31in [7.9mm]
1.28in [32.5mm]
0.49in [12.4mm]
1.22in [31.0mm]
1.06in [26.8mm]
1.41in [35.9mm]
PANEL MOUNTING
1.065in [27.051mm]
FITS PANELS UP TO 0.50in [12.7mm] THICK
"S" TERMINALS
TOLERANCES ARE ±0.03in [±0.76mm] UNLESS OTHERWISE SPECIFIED