Floyd Bell Inc
SOUND SOLUTIONS

Ultra Series
UB-19-230-W(F)



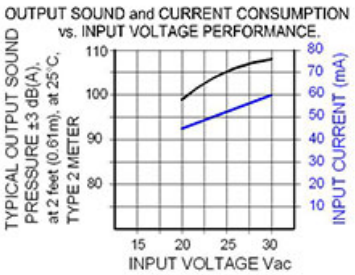


More Information

UL Recognized

RoHS Rohs Compliant

## Specifications

| | |
|---|---|
| **Mounting** | Panel Mount |
| **Operating Mode** | Ultra Loud Fast Beep Tone |
| **Operating Voltage** | 20-30 Vac/dc |
| **Operating Frequency** | 2100±250 Hz |
| **Typical Operating Current** | 45 mA at 20 Vac/dc<br>60 mA at 30 Vac/dc |
| **Typical Sound Pressure** | 100 ±5 dB(A) at 20 Vac/dc at 24 inches (61 cm), at 25°C<br>109 ±5 dB(A) at 30 Vac/dc at 24 inches (61 cm), at 25°C |
| **Termination** | Wires |
| **Termination Strength** | Pull test with a maximum of 22 pounds (10 kg) load |
| **Operating Temperature** | -20_C to +65_C |
| **Storage Temperature** | -40_C to +85_C |
| **Surge Voltage** | 20% over maximum rated voltage for less than 5 minutes |
| **Reverse Voltage Protection** | To the maximum operating voltage |
| **Construction Materials** | Case- Plastic _NORYL_ N-190, Flame Retardant UL 94-VO, Black<br>Internal Circuit- Audio-oscillator and piezoelectric driver<br>Potting- 2 parts epoxy resin or silicone, black<br>Diaphragm- Stainless Steel 304 |
| **Gasket** | NEMA 4X Gasket (sold separately) 0.062" thick, 60 Durometer Neoprene |
| **Construction Materials** | ASTM B117 Certified - Withstands exposure to salt spray for 300 hours<br>IP 68 Certified - Withstands water submergence and dust exposure<br>Humidity- 95% relative humidity at +40_C continuously for 100 hours.<br>Vibration- Withstands vibration between 0 and 55 Hz. on all axes. |
| **Life Expectancy** | 10 years under normal operating conditions. |
| **Warranty** | For a period of two years from the date of manufacture under normal operating conditions. |
| **Notes** | This product is not intended as a life safety device. |
| **Terms and Conditions of Sale** | Link here |

**Dimensions**

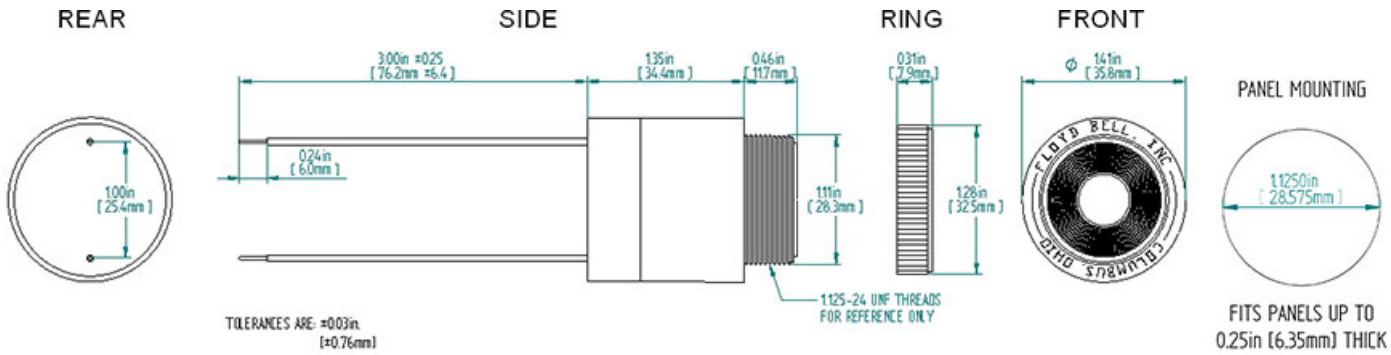
REAR
SIDE
RING
FRONT
PANEL MOUNTING
3.00in ±.025
[76.2mm ±6.4]
1.35in
[34.4mm]
0.46in
[11.7mm]
0.31in
[7.9mm]
Ø 1.41in
[35.8mm]
0.24in
[6.0mm]
1.00in
[25.4mm]
1.11in
[28.3mm]
1.28in
[32.5mm]
1.1250in
[28.575mm]
1.125-24 UNF THREADS
FOR REFERENCE ONLY
TOLERANCES ARE: ±.03in.
[±0.76mm]
FITS PANELS UP TO
0.25in [6.35mm] THICK