Floyd Bell Inc
SOUND SOLUTIONS

Ultra Series
US-05-628-P

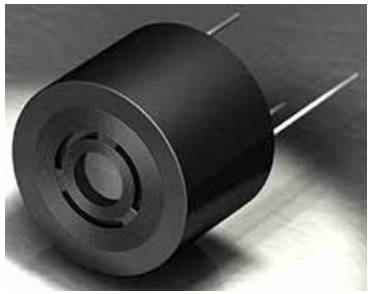

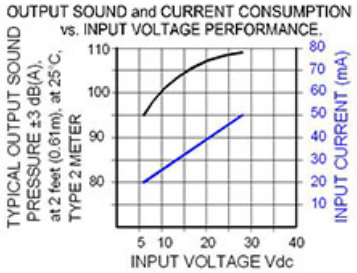

More Information

UL Recognized

RoHS Rohs Compliant

Specifications

Mounting	PC Mount
Operating Mode	Ultra Loud Siren Tone
Operating Voltage	6-28 Vdc
Operating Frequency	2100±250 Hz Center
Typical Operating Current	20 mA at 6 Vdc 50 mA at 28 Vdc
Typical Sound Pressure	95 ±5 dB(A) at 6 Vdc at 24 inches (61 cm), at 25°C 109 ±5 dB(A) at 28 Vdc at 24 inches (61 cm), at 25°C
Termination	PC Pins
Termination Strength	Pull test with a maximum of 22 pounds (10 kg) load
Operating Temperature	-20_C to +65_C
Storage Temperature	-40_C to +85_C
Surge Voltage	20% over maximum rated voltage for less than 5 minutes
Reverse Voltage Protection	To the maximum operating voltage
Construction Materials	Case- Plastic _NORYL_ N-190, Flame Retardant UL 94-VO, Black Internal Circuit- Audio-oscillator and piezoelectric driver Potting- 2 parts epoxy resin or silicone, black Diaphragm- Stainless Steel 304
Construction Materials	ASTM B117 Certified - Withstands exposure to salt spray for 300 hours IP 68 Certified - Withstands water submergence and dust exposure Humidity- 95% relative humidity at +40_C continuously for 100 hours. Vibration- Withstands vibration between 0 and 55 Hz. on all axes.
Life Expectancy	10 years under normal operating conditions.
Warranty	For a period of two years from the date of manufacture under normal operating conditions.
Notes	This product is not intended as a life safety device.
Terms and Conditions of Sale	Link here

Dimensions

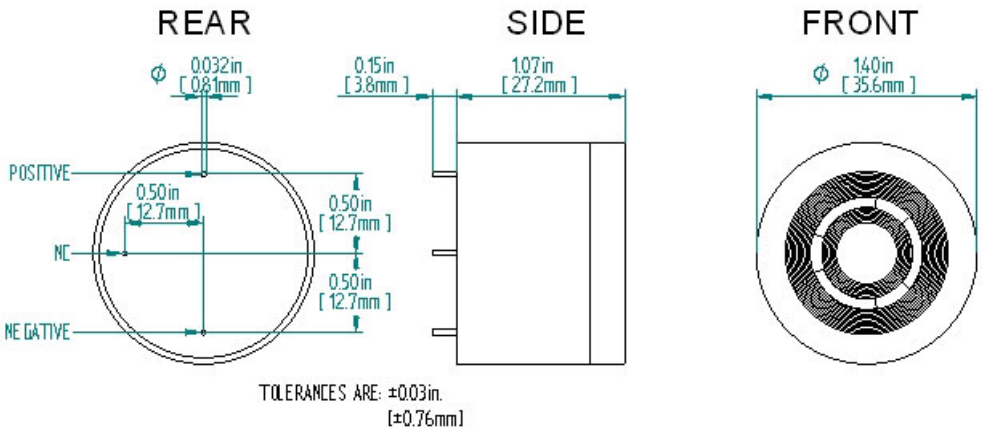
REAR
SIDE
FRONT
Φ 0.032in [0.81mm]
0.15in [3.8mm]
1.07in [27.2mm]
Φ 1.40in [35.6mm]
POSITIVE
0.50in [12.7mm]
NC
0.50in [12.7mm]
NEGATIVE
0.50in [12.7mm]
TOLERANCES ARE: ±0.03in. [±0.76mm]