Floyd Bell Inc
SOUND SOLUTIONS

AudioLarm II Series
MB-09-531-S(M)

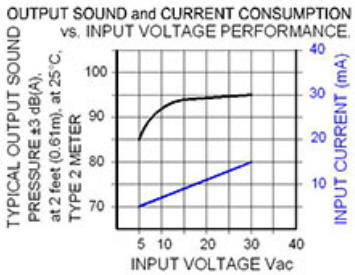

More Information

UL Recognized

Rohs Compliant

Specifications

Mounting	Panel Mount
Operating Mode	Medium Loud Medium Beep Tone
Operating Voltage	5-24 Vac/dc
Operating Frequency	2900±250 Hz
Typical Operating Current	5 mA at 5 Vac/dc 15 mA at 24 Vac/dc
Typical Sound Pressure	85 ±5 dB(A) at 5 Vac/dc at 24 inches (61 cm), at 25°C 95 ±5 dB(A) at 24 Vac/dc at 24 inches (61 cm), at 25°C
Termination	Quick Connect Blades with Screws
Termination Strength	Pull test with a maximum of 22 pounds (10 kg) load
Operating Temperature	-20_C to +65_C
Storage Temperature	-40_C to +85_C
Surge Voltage	20% over maximum rated voltage for less than 5 minutes
Reverse Voltage Protection	To the maximum operating voltage
Construction Materials	Case- Plastic _NORYL_ N-190, Flame Retardant UL 94-VO, Black Internal Circuit- Audio-oscillator and piezoelectric driver Potting- 2 parts epoxy resin or silicone, black Diaphragm- Stainless Steel 304
Gasket	Gasket (sold separately) 0.062" thick, 60 Durometer Neoprene
Construction Materials	ASTM B117 Certified - Withstands exposure to salt spray for 300 hours IP 68 Certified - Withstands water submergence and dust exposure Humidity- 95% relative humidity at +40_C continuously for 100 hours. Vibration- Withstands vibration between 0 and 55 Hz. on all axes.
Life Expectancy	10 years under normal operating conditions.
Warranty	For a period of two years from the date of manufacture under normal operating conditions.
Notes	This product is not intended as a life safety device.
Terms and Conditions of Sale	Link here

Dimensions

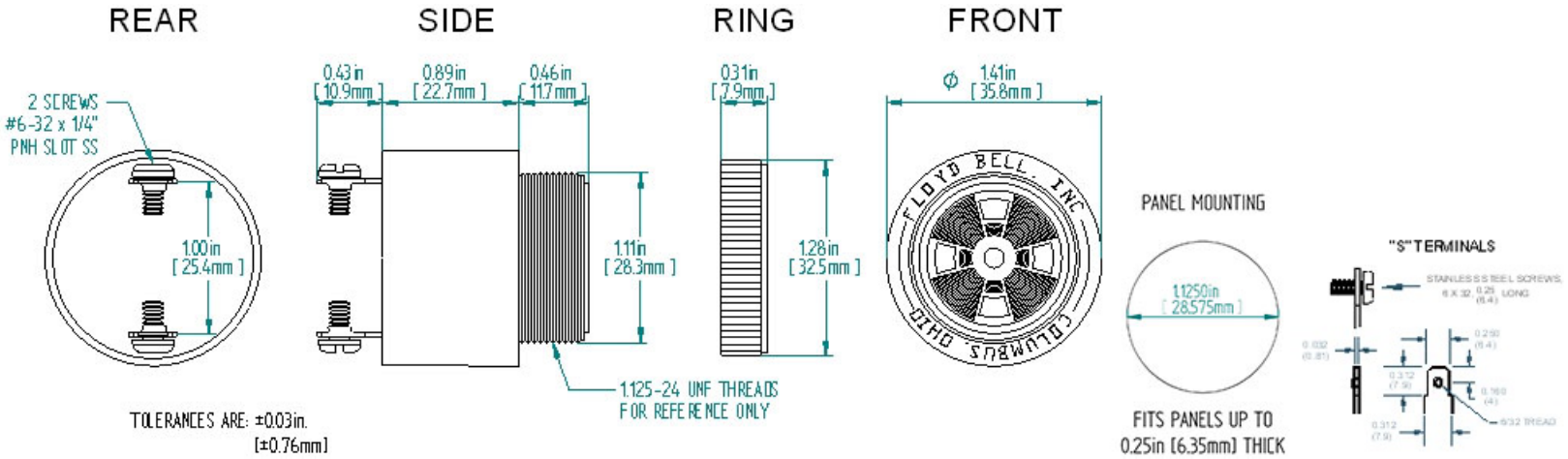
REAR
SIDE
RING
FRONT
2 SCREWS
#6-32 x 1/4"
PNH SLOT SS
1.00in
[25.4mm]
0.43in
[10.9mm]
0.89in
[22.7mm]
0.46in
[11.7mm]
1.11in
[28.3mm]
1.125-24 UNF THREADS
FOR REFERENCE ONLY
0.31in
[7.9mm]
1.28in
[32.5mm]
Φ 1.41in
[35.8mm]
FLOYD BELL INC
COLUMBUS OHIO
TOLERANCES ARE: ±0.03in.
[±0.76mm]
PANEL MOUNTING
1.1250in
[28.575mm]
FITS PANELS UP TO
0.25in (6.35mm) THICK
"S" TERMINALS