Floyd Bell Inc
SOUND SOLUTIONS

AudioLarm II Series
MB-V09-301-Q(U)

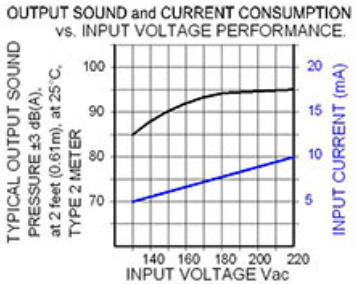

More Information

UL Recognized

Rohs Compliant

Specifications

Mounting	Panel Mount with Volume Control
Operating Mode	Medium Loud Ultra Fast Beep Tone
Operating Voltage	130-220 Vac
Operating Frequency	2900±250 Hz
Typical Operating Current	5 mA at 130 Vac 10 mA at 220 Vac
Typical Sound Pressure	85 ±5 dB(A) at 130 Vac at 24 inches (61 cm), at 25°C 95 ±5 dB(A) at 220 Vac at 24 inches (61 cm), at 25°C
Termination	Quick Connect Blades
Termination Strength	Pull test with a maximum of 22 pounds (10 kg) load
Operating Temperature	-20_C to +65_C
Storage Temperature	-40_C to +85_C
Surge Voltage	20% over maximum rated voltage for less than 5 minutes
Reverse Voltage Protection	To the maximum operating voltage
Construction Materials	Case- Plastic _NORYL_ N-190, Flame Retardant UL 94-VO, Black Internal Circuit- Audio-oscillator and piezoelectric driver Potting- 2 parts epoxy resin or silicone, black Diaphragm- Stainless Steel 304
Gasket	Gasket (sold separately) 0.062" thick, 60 Durometer Neoprene
Construction Materials	ASTM B117 Certified - Withstands exposure to salt spray for 300 hours IP 68 Certified - Withstands water submergence and dust exposure Humidity- 95% relative humidity at +40_C continuously for 100 hours. Vibration- Withstands vibration between 0 and 55 Hz. on all axes.
Life Expectancy	10 years under normal operating conditions.
Warranty	For a period of two years from the date of manufacture under normal operating conditions.
Notes	This product is not intended as a life safety device.
Terms and Conditions of Sale	Link here

Dimensions

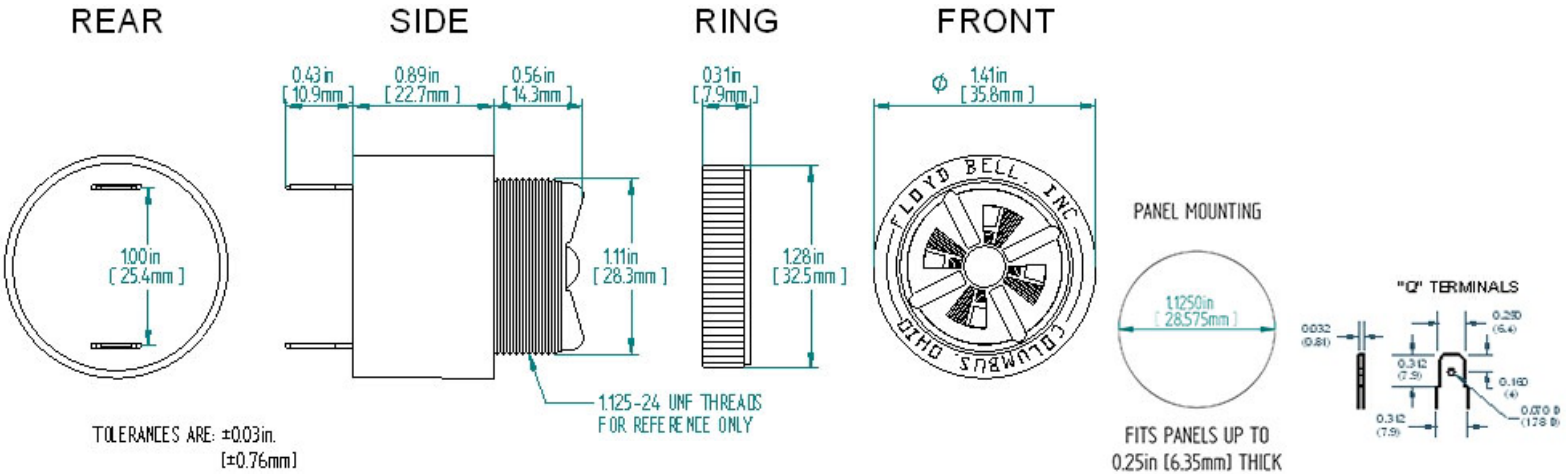
REAR
SIDE
RING
FRONT
0.43in [10.9mm]
0.89in [22.7mm]
0.56in [14.3mm]
0.31in [7.9mm]
Φ 1.41in [35.8mm]
1.00in [25.4mm]
1.11in [28.3mm]
1.28in [32.5mm]
FLOYD BELL INC
COLUMBUS OHIO
1.125-24 UNF THREADS FOR REFERENCE ONLY
TOLERANCES ARE: ±0.03in. [±0.76mm]
PANEL MOUNTING
1.1250in [28.575mm]
FITS PANELS UP TO 0.25in [6.35mm] THICK
"Q" TERMINALS
0.032 (0.81)
0.250 (6.4)
0.312 (7.9)
0.160 (4)
0.070 D (1.78 D)
0.312 (7.9)